Pergola A1

Aluminium shady structure with
packaging retractable awning, in fabric made (tight when opened) fixed to crossbar profiles trolleys and guides system which permit the horizontal sliding. Guaranteed wind resistance up to class 3 according to UNI EN 13561.
On request it is possible to install the antidrop system for the rain protection. The resistance under snow weight is not guaranteed.
The development of condensation on the fabric is natural and not to be considered as a defect.

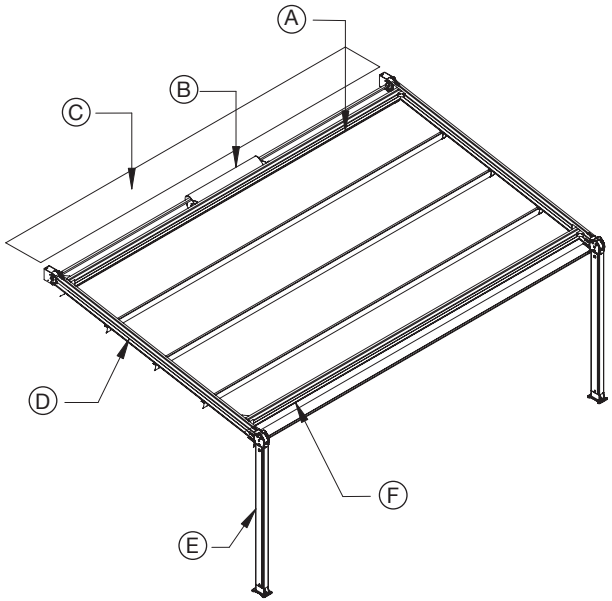

A Supporting motor and hood crossbar profile
B Moving electrical control
C Protection hood
D Main sliding guide
E Pilar
F Frontal girder

9010 1013 8014 MATT

adrems
Stínící technika a dekorace oken.

Bubenečská 258/9, Praha 6 +420 603 390 652 e-mail: info@adrems.cz www.adrems.cz
Pro návštevu ateliéru se prosím předem objednejte na výše uvedených mobilních číslech nebo emailu.

Schema tecnico generale/General technical plan/Allgemein - technisches Schema/Plan technique général/Dibujo tecnico general

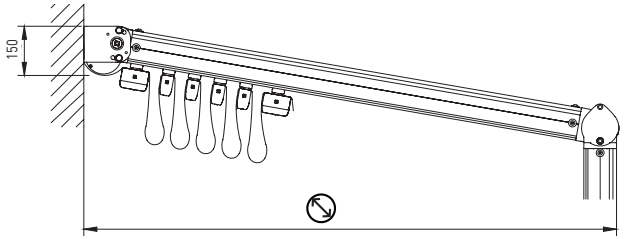

Larghezza interasse guide/Guides interaxis width/Breite des Achsabstandes der Führungsschienen/Largeur entraxe coulisses/ Linea guía intereje

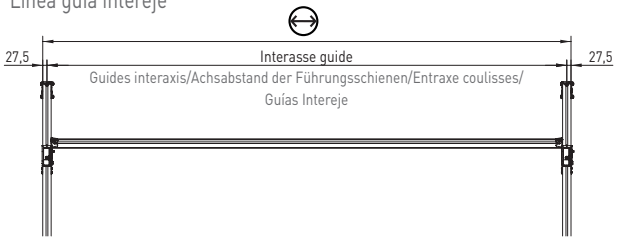

Dimensioni profili/Profiles dimensions/Profilabmessungen/ Mesures profils/Dimensiones perfiles

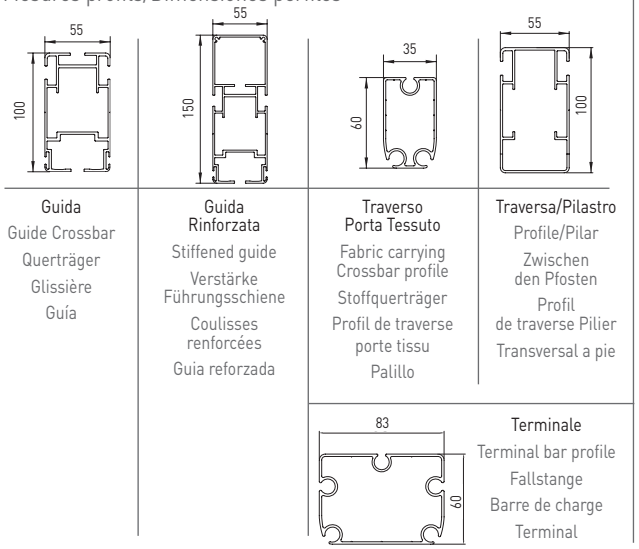

Guida	Guida Rinforzata	Traverso Porta Tessuto	Traversa/Pilastro
Guide Crossbar	Stiffened guide	Fabric carrying Crossbar profile	Profile/Pilar
Querträger	Verstärke Führungsschiene	Stoffquerträger	Zwischen den Pfosten
Glissière	Coulisses renforcées	Profil de traverse porte tissu	Profil de traverse Pilier
Guía	Guia reforzada	Palillo	Transversal a pie

Terminale
Terminal bar profile
Fallstange
Barre de charge
Terminal

Attacco a terra/Ground connection/Bodenbefestifgung/ Fixation au sol/Fijación a suelo

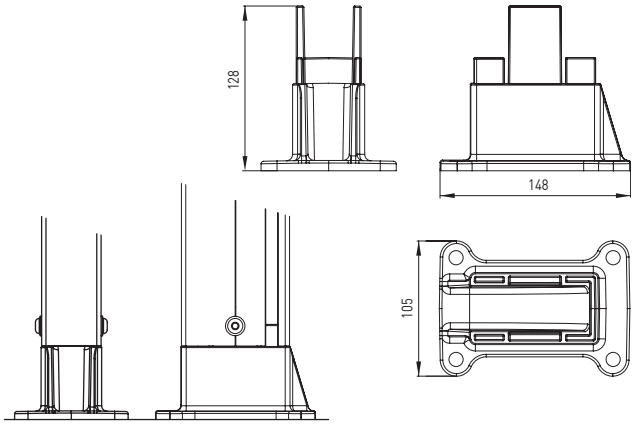

Applicazione a soffitto/Ceiling installation/Deckenmontage/Pose au plafond/Installación a techo

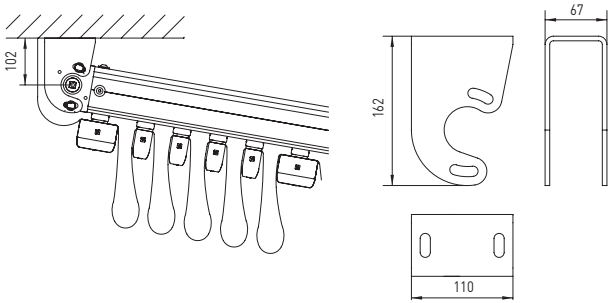

Applicazione a parete/Wall installation/Wandmontage/ Pose au mur/Installación a pared

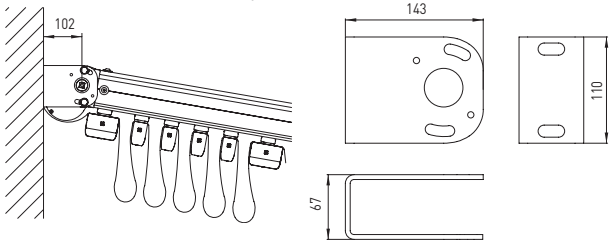

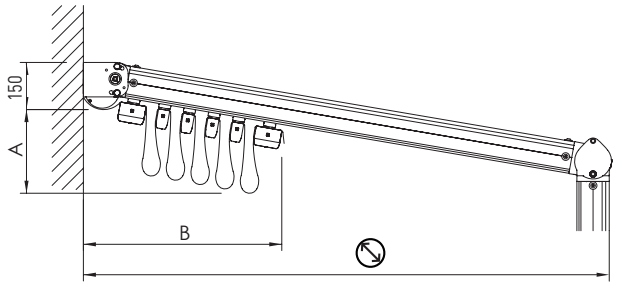

Valori indicativi degli ingombri del telo e del numero di traversi portatelo.
Attenzione: i valori esposti possono variare a seconda della pendenza.

Indicative values of the fabric encumbrance and the number of the fabric carrying crossbar profiles.
Attention: the indicated values may change according to the inclination.

Richtwerte der Ausmaße des Tuches und der Anzahl der Stoffquerträger Achtung: die angegebenen Werte können sich je nach Gefälle ändern.

Valeurs indicatives des encombrements de la toile et du nombre de profils de traverse porte tissu. Attention: les valeurs peuvent changer selon la pente

Valores indicativos de las dimensiones del tejido y del numero de palillos.
Atención: los valores indicados pueden cambiar según la inclinación.

	A cm	B cm	N
250	34	44	5
300	37	44	5
350	39	49	6
400	39	54	7
450	39	60	8
500	39	65	9
550	40	70	10
600	43	70	10
650	43	75	10

N Numero traversi (compreso terminali). Misura massima interasse traversi portatelo 62 cm.
N Crossbar profile numbers (terminals included). Maximum interaxis fabric carrying crossbar profiles measure cm 62.
N Anzahl der Querträger (inklusiv Fallstangen). Maximaler Achsabstand der Stofftragerschienen cm 62.
N Nombre profils de traverse (compris barres de charge). Mesure maximale entraxe profils traverse porte tissu cm 62.
N Numero de perfiles transversales (terminales includos). Medida màxima intereje perfiles transversales para lona cm 62.